Queensland University of Technology
Brisbane Australia

Developments in pulp and paper manufacture from sugarcane bagasse Symposium and Workshop

May 3 - 4, 2007 QUT, Gardens Point Campus, Brisbane

Bagasse Fibre Processing Overview

Robert (Bob) W. Hurter, MBA, P. Eng.
President
HurterConsult Incorporated
4 – 5330 Canotek Road
Ottawa, Ontario, Canada K1J 9C1
Email: bobhurter@hurterconsult.com
Web site: www.HurterConsult.com

Bagasse

- Biomass residue remaining after crushing sugarcane to remove the sugar juices
- Typically discharged from the sugar mill at about 50% moisture content
- Typically delivered by conveyor direct from the adjacent sugar mill

Bagasse storage - Pakistan

Bagasse Pulp Mill Units

- Moist depithing
- Wet bulk storage
- Wet depithing/cleaning
- Cooking & brownstock washing
- Oxygen delignification
- Screening & cleaning
- Bleaching

Moist Depithing

- Bagasse contains about 30% pith cells
- Pith – cellulose but not fibre
- Pith must be remove for good pulp quality
- Bagasse from the sugar mill is moist depithed prior to storage

Moist Depithing

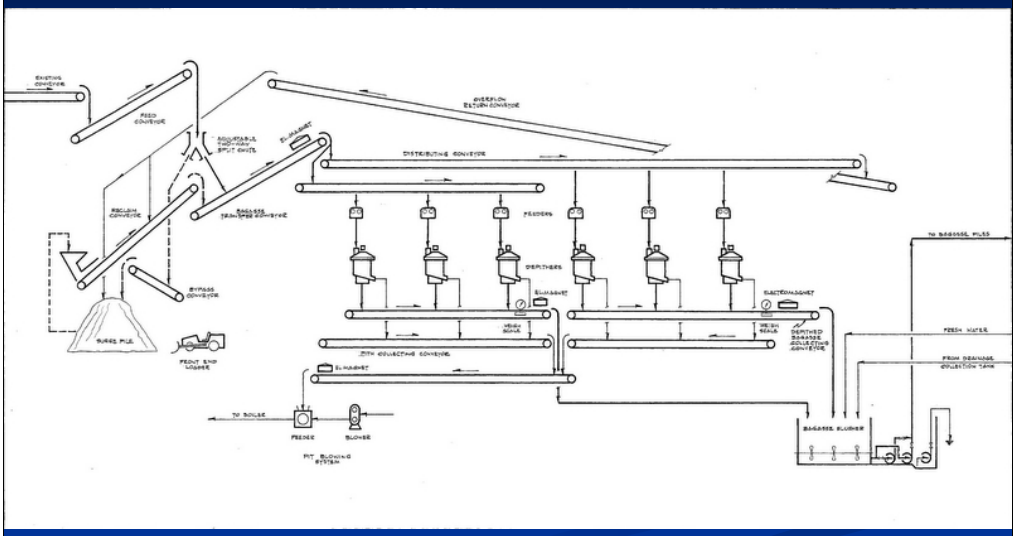

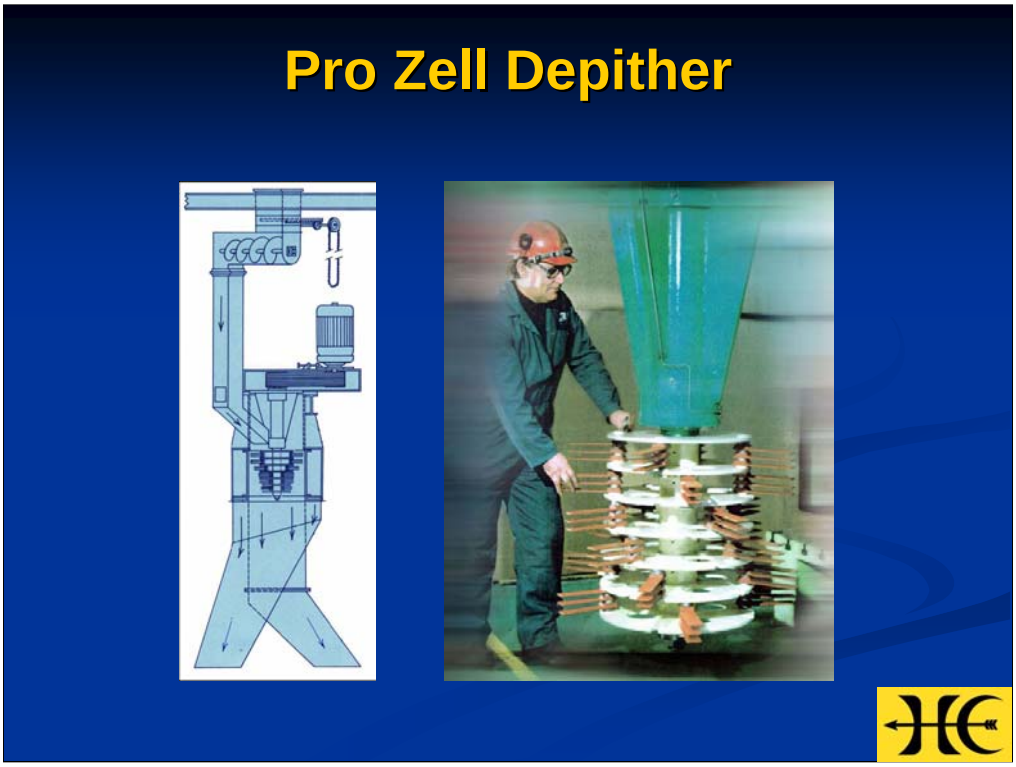

Moist depithers are essentially a type of hammer mill. This slide shows the Pro Zell depither.

Pro Zell Depither

Type	MD1000	MD1250
Driving power - connected (kw)	110	200
Ave. input capacity/hour (BDMT)	8	13
Typical fibre/pith ratio	70/30	70/30

Lenzing Technik Depither

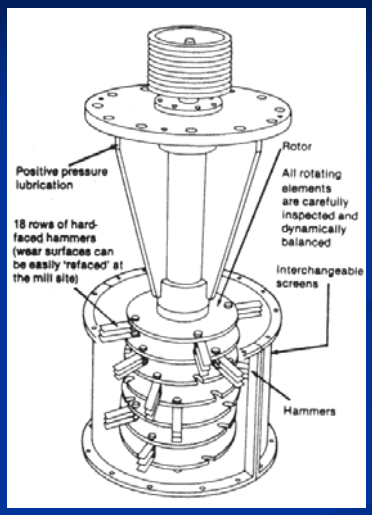

Lenzing Technik also offers a bagasse depither.

Bagasse Pulp Mill Units

- Moist depithing
- Wet bulk storage
- Wet depithing/cleaning
- Cooking & brownstock washing
- Oxygen delignification
- Screening & cleaning
- Bleaching

Wet Bulk Storage

- Sugar mills in most parts of the world operate for only about 6 – 7 months
- Peru is an “exception” – sugar mills operate 11 months
- Bagasse long term storage is required
- After moist depithing, it is stored in wet bulk piles (80% or higher moisture content) to control micro-biological action in the pile

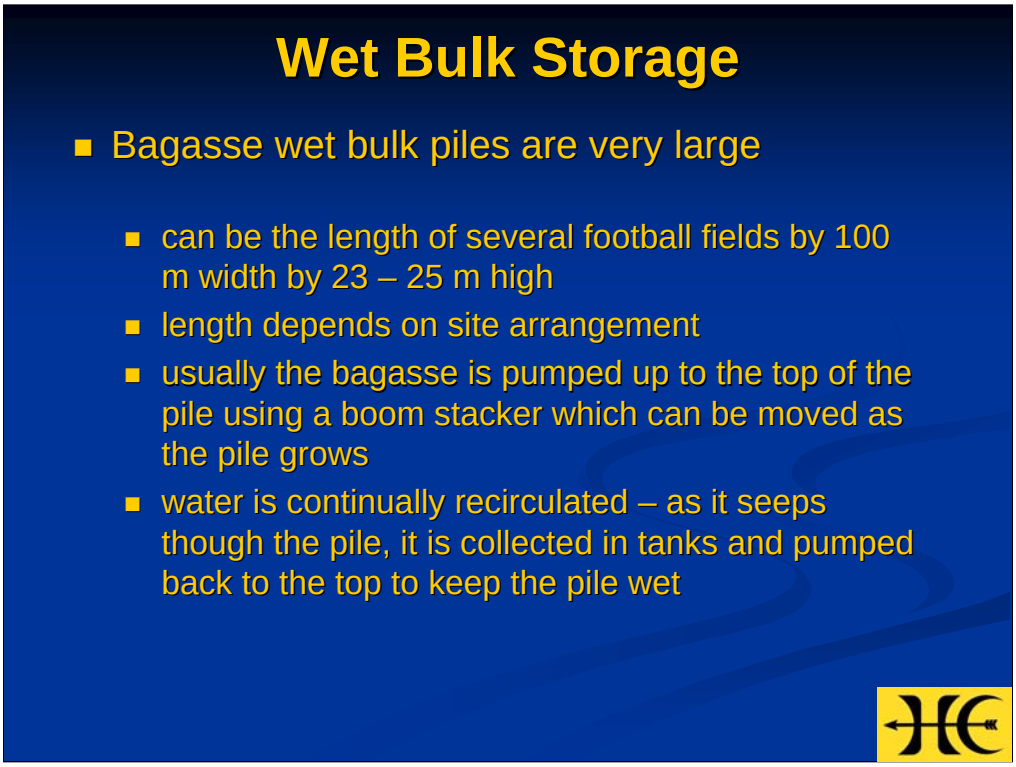

Bagasse wet bulk piles are very large.

They can be the length of several football fields by 100 m width by 23 – 25 m high. The length often depends on site arrangement.

Usually the bagasse is pumped up to the top of the pile using a boom stacker which can be moved as the pile grows.

Water is continually recirculated. As it seeps though the pile, it is collected in tanks and pumped back to the top to keep the pile wet.

Bagasse is retrieved from the pile on a first-in, first out basis so that the bagasse being used is always about the same age.

Wet Bulk Storage

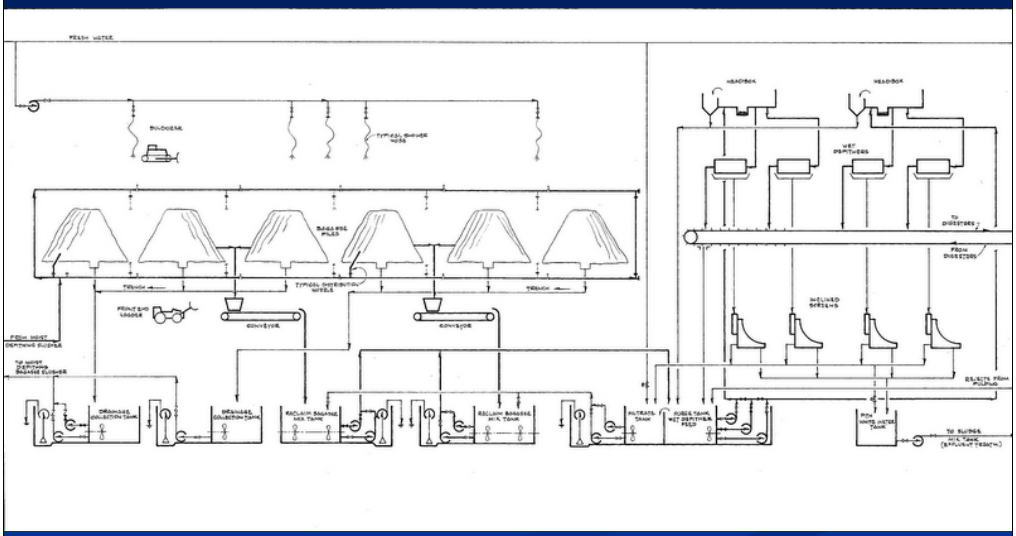

This slide shows an artist's rendition of a 300 metric ton per day bagasse based fine paper mill.

Describe slide

- Rail lines for bringing sugar cane to the sugar mill
- Moist Depithing – on right
- Out to bagasse wet bulk piles
- Pile reclaim
- Wet depithing – same area as moist depithing
- Pulping group
- Paper mill
- Recovery island
- Housing colony

Wet Bulk Storage

Wet Bulk Piles – 300 mt/day bagasse fine paper mill

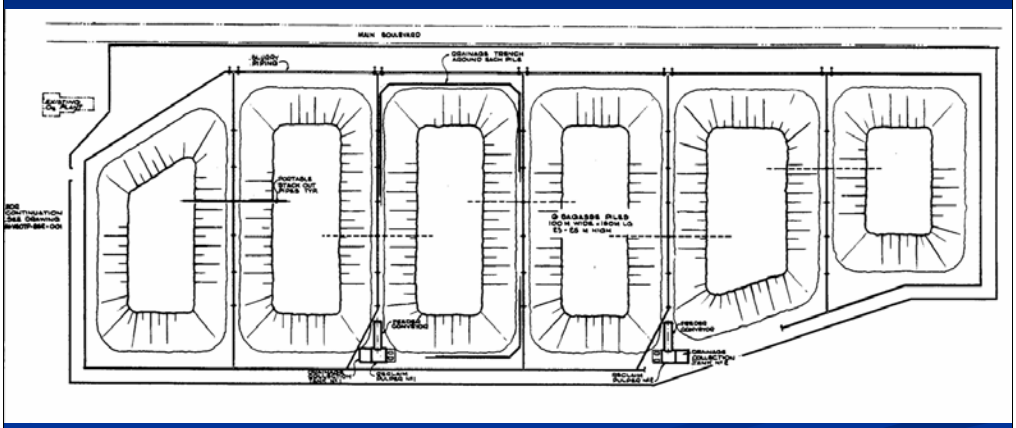

This slide is the recommended layout for the bagasse piles shown in the artist's rendition. These piles were set up in this manner due to the configuration of the site area which already included a large sugar mill, housing and rail lines.

Moist depithed bagasse is pumped from the depithing station to the bagasse storage area. Each pile has slurry piping and portable stack out piping for building the pile.

A drainage trench surrounds each pile and the water seeping through the piles is collected in the trench and directed to a collection tank from which it is pumped back to the top of the pile.

Bagasse is reclaimed using front end loaders that place the bagasse on a conveyor that feeds a bagasse reclaim tank where it is slushed and pumped back to the wet depithing system

Wet Bulk Storage

Boom Stacker – Tamil Nadu Newsprint & Paper Ltd.

There are many types of stackers used to build up the bagasse wet bulk storage piles.

Some involve manual relocation of the stack out piping and others use fully mechanized operation.

This slide shows the boom stacker at Tamil Nadu Newsprint & Paper Ltd., in India.

Bagasse Pulp Mill Units

- Moist depithing
- Wet bulk storage
- Wet depithing/cleaning
- Cooking & brownstock washing
- Oxygen delignification
- Screening & cleaning
- Bleaching

Wet Depithing/Cleaning

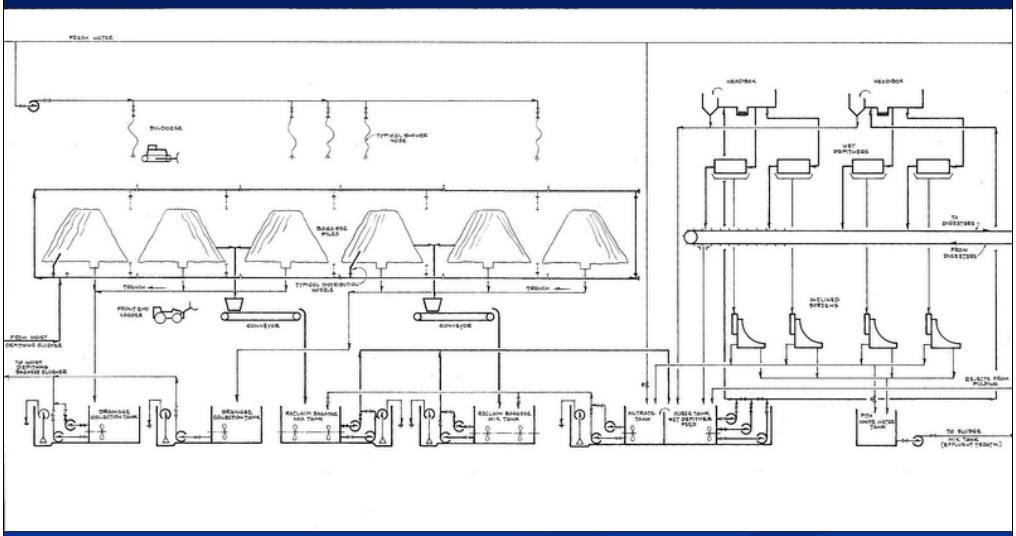

Wet depithers are basically a form of trommel screen.

Wet Depithing/Cleaning

Wet Depither

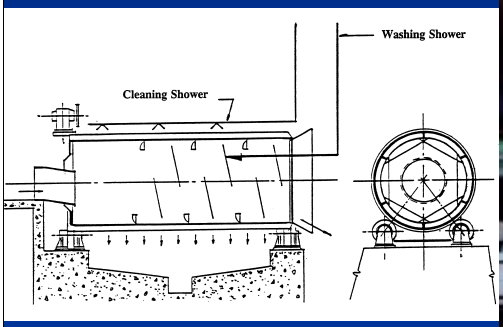

Pakistan Paper Corporation

Wet depithers are essentially trommel screens.

Wet depithers at Pakistan Paper Corporation.

Bagasse Pulp Mill Units

- Moist depithing
- Wet bulk storage
- Wet depithing/cleaning
- Cooking & brownstock washing
- Oxygen delignification
- Screening & cleaning
- Bleaching

Cooking & Brownstock Washing

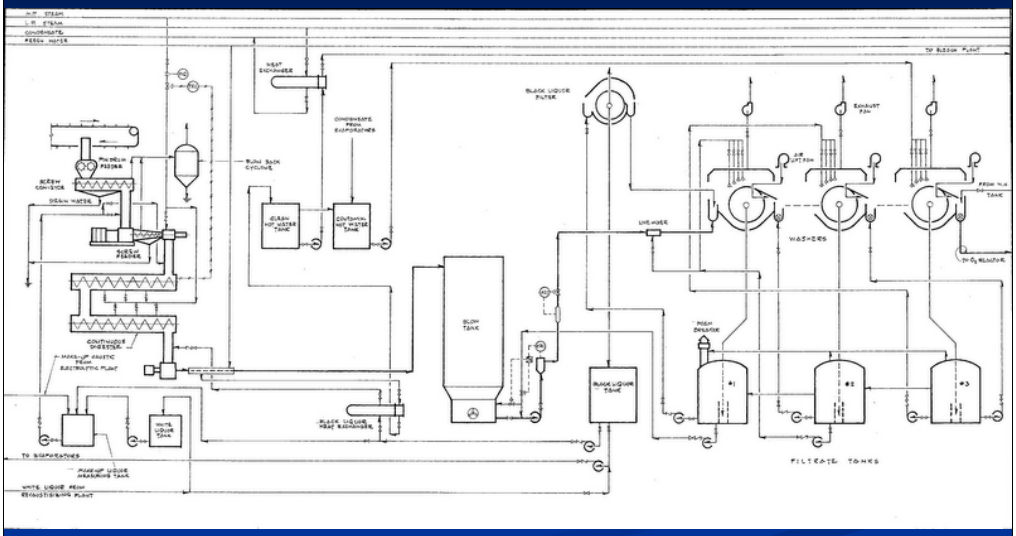

Bagasse is typically cooked in a continuous horizontal tube digester. The number of tubes and their diameter depend on the required pulp production. The cooked pulp is sent to the blow tank.

In the past, a hot blow was used but more recently cold blow systems have been used as they give better pulp quality. The cold blow is accomplished by introducing black liquor to the cold blow discharge system.

From the blow tank, the cooked pulp is pumped to the brownstock washers where it is washed to remove the used cooking liquor and dissolved material. The washer filtrate called black liquor contains dissolved lignin, hemicellulose, and inorganic material from the cooking liquor as well as those dissolved from the bagasse. Silica in the bagasse is dissolved in the black liquor and this important to note due to possible problems related to silica in the chemical recovery system.

Several washers – typically 3 or 4 – are arranged in series. Fresh water or filtrate from the oxygen delignification washers if available is used in the last washer to wash the pulp and the filtrate from that washer is used counter-current to wash the pulp in the preceding washer. Filtrate or black liquor from the first washer is sent to chemical recovery.

Pulp from the brownstock washers may go to an unbleached pulp storage tower or to oxygen delignification if it is included in the mill.

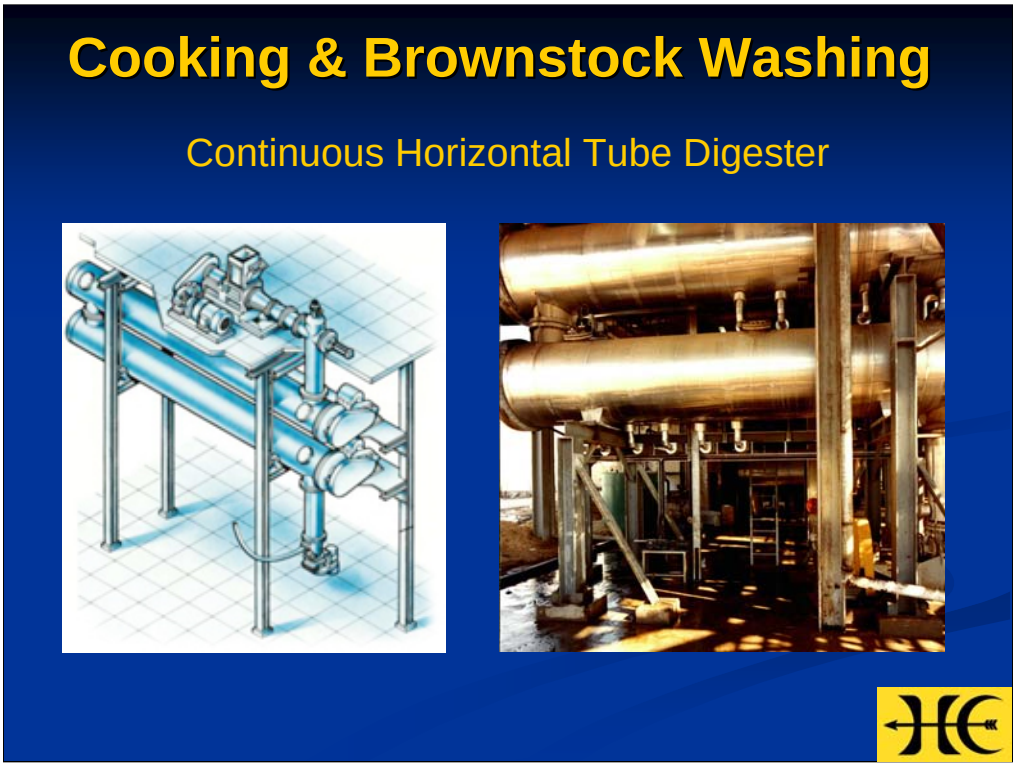

Continuous horizontal tube digesters are offered by several companies such as GL&V of Canada and Lenzing Technik of Austria. They are also manufactured in China and India.

Cooking & Brownstock Washing

Cooking Conditions				
Pulp Grade	**Process**	**Chemical Charge (on OD fibre)**	**Time**	**Temperature**
Semi-chemical	soda	6 – 10% NaOH	8 – 10 min	175 ^{0}C
Full chemical	soda	12 – 16% NaOH	10 – 12 min	170 – 175 ^{0}C
	Kraft	11 – 13% AA as Na_2O 15 – 20% sulphidity	10 – 12 min	170 – 175 ^{0}C

This table shows typical cooking conditions for producing semi-chemical grade and full chemical bleachable grade bagasse pulps. It is possible to operate at lower temperatures but then the amount of time in the digester must increase.

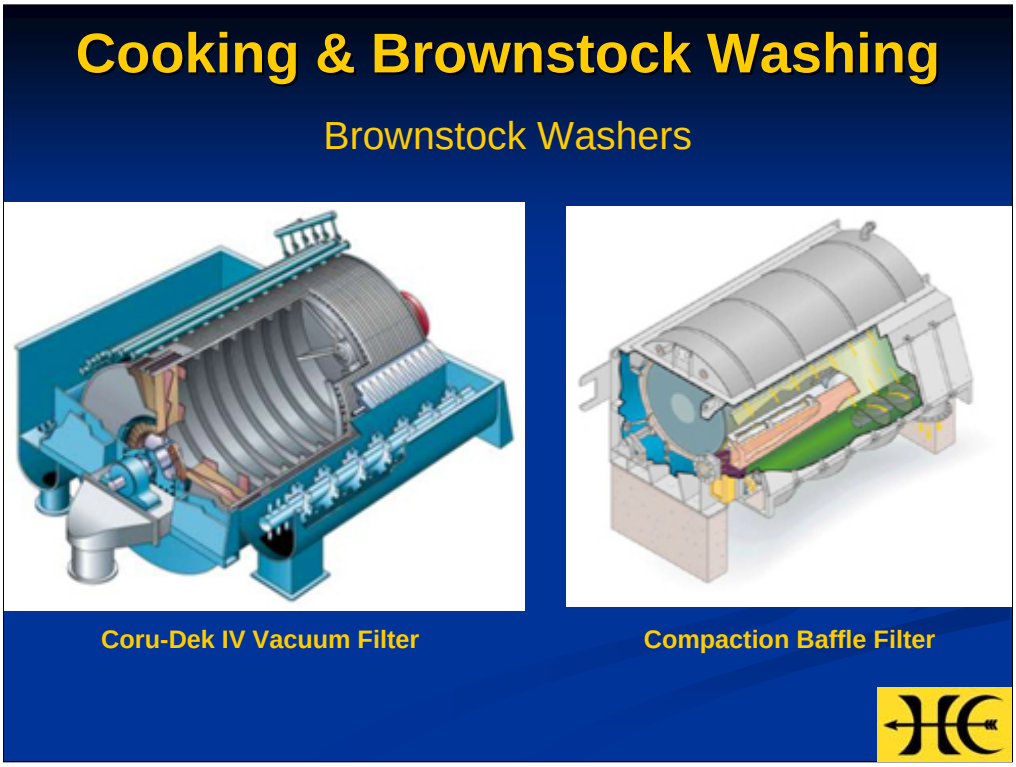

Brownstock washers wash the cooked pulp to remove the used cooking liquor and dissolved material. The washer filtrate called black liquor contains dissolved lignin, hemicellulose, and inorganic material from the cooking liquor as well as those dissolved from the bagasse.

Brownstock washers are offered by many suppliers. They also come in various types of vacuum and pressure washers. In the woodpulp industry, high capacity twin roll press washer are used extensively but they have not been used in nonwood mills as yet.

This slide shows two types of filters offered by GL&V of Canada – a Coru-Dek IV vacuum filter and a Compaction baffle pressure filter.

Bagasse Pulp Mill Units

- Moist depithing
- Wet bulk storage
- Wet depithing/cleaning
- Cooking & brownstock washing
- Oxygen delignification
- Screening & cleaning
- Bleaching

Oxygen Delignification

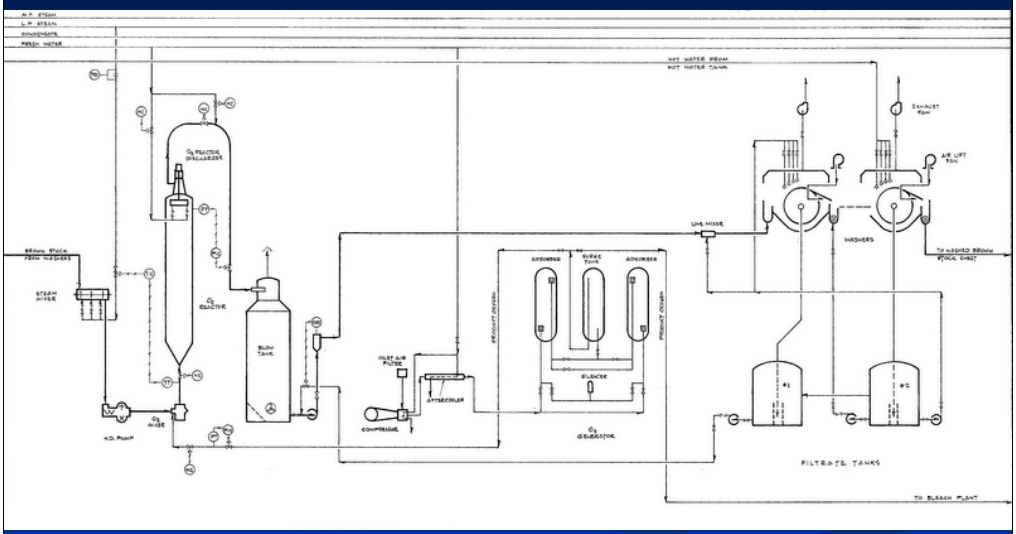

Oxygen delignification has been around for about 20 years and is widely used in the woodpulp industry. The concept is that it allows for a mild extension of the cooking process to reduce the Kappa number (a measure of the amount of lignin remaining in the pulp) of the pulp so that it is easier to bleach using less chemicals in bleaching.

Typically, you would cook to a Kappa number of 16 – 18. Then, using oxygen delignification, you would reduce the Kappa number to 8 – 10 prior to bleaching.

After the oxygen delignification stage, the pulp would be washed using washer similar to those used for brownstock washing.

Oxygen Delignification

Washers

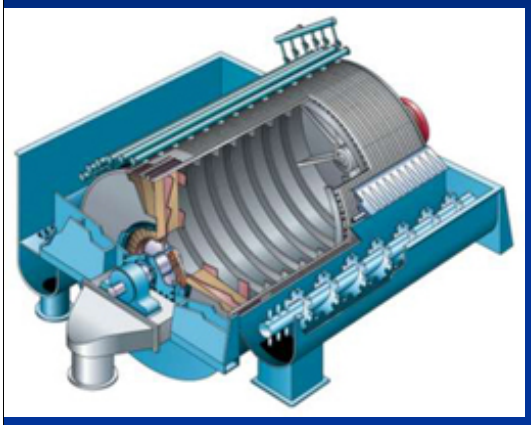

Coru-Dek IV Vacuum Filter

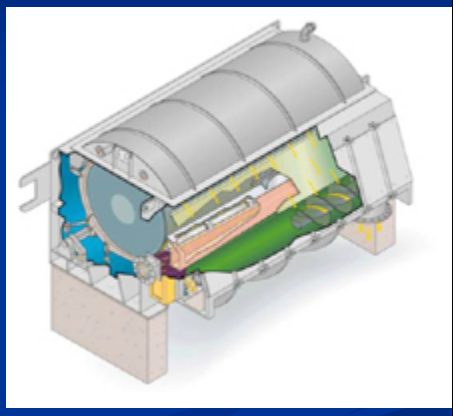

Compaction Baffle Filter

This slide shows two types of filters offered by GL&V of Canada – a Coru-Dek IV vacuum filter and a Compaction baffle pressure filter.

Bagasse Pulp Mill Units

- Moist depithing
- Wet bulk storage
- Wet depithing/cleaning
- Cooking & brownstock washing
- Oxygen delignification
- Screening & cleaning
- Bleaching

Screening & Cleaning

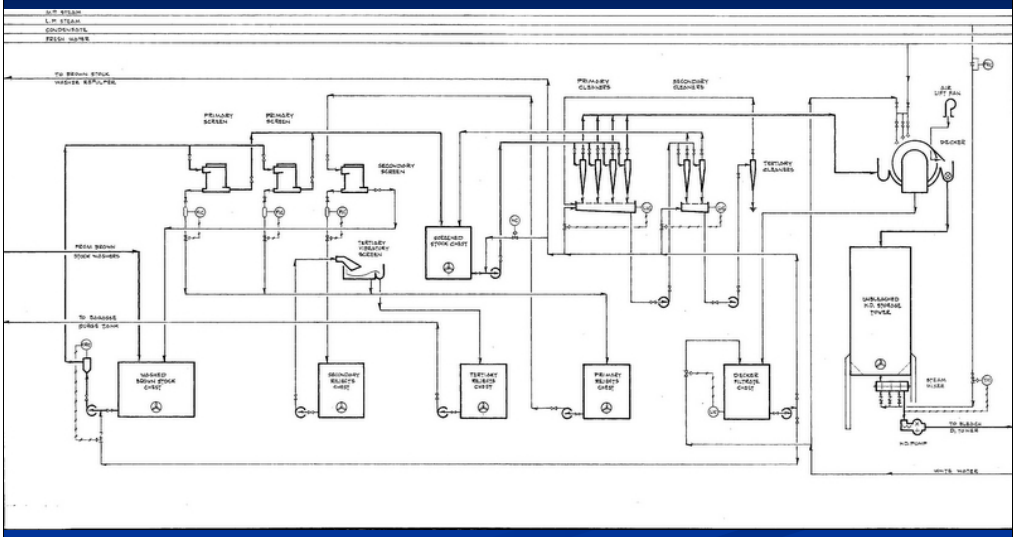

Typically, the unbleached pulp is screened using several stages of pressure screens and then cleaned using several stages of centrifical cleaners. This is to remove any impurities from the pulp.

This flowsheet shows a three stage screening system with two primary pressure screens, one secondary pressure screen that treats the primary creen rejects and one tretiary vibrating screen that treats the secondary screen rejects.

The stock from screening goes to a tank and it is diluted as it is pumped out of the tank to the centicleaners. The flowsheet depicts a three stage centricleaner system The first stage will have the most cleaners, the send stage fewer cleaners and the third stage the least amount of cleaners. Similar to the screening system, the secondary cleaners treat the rejects from the primary cleaners and the tertiary cleaners treat the rejects from the secondary cleaners. Some mills have 4 stage cleaning.

Screens of various types are offered by many suppliers.

This slide shows two screens – a Hi-Q fine screen offered by GL&V of Canada and a MultiSreen MSS offered by Voith of Germany.

Cleaners of various types are offered by many suppliers.

This slide shows cleaner banks - a GL&V Celleco Cleanpac 350 and of Canada and a Voith EcoMizer.

Bagasse Pulp Mill Units

- Moist depithing
- Wet bulk storage
- Wet depithing/cleaning
- Cooking & brownstock washing
- Oxygen delignification
- Screening & cleaning
- Bleaching

Bleaching

- Bagasse is easy to bleach
- Traditionally used C-E-H sequence
  - Fallen out of favour due to dioxin formation using elemental chlorine
- Today use either ECF or TCF bleaching
  - Preferred bleaching is ECF
- ECF sequence for bagasse
  - Most likely: D-E-D
  - May reinforce the E stage with oxygen and possibly peroxide – i.e. E_O or E_{OP}

Bleaching

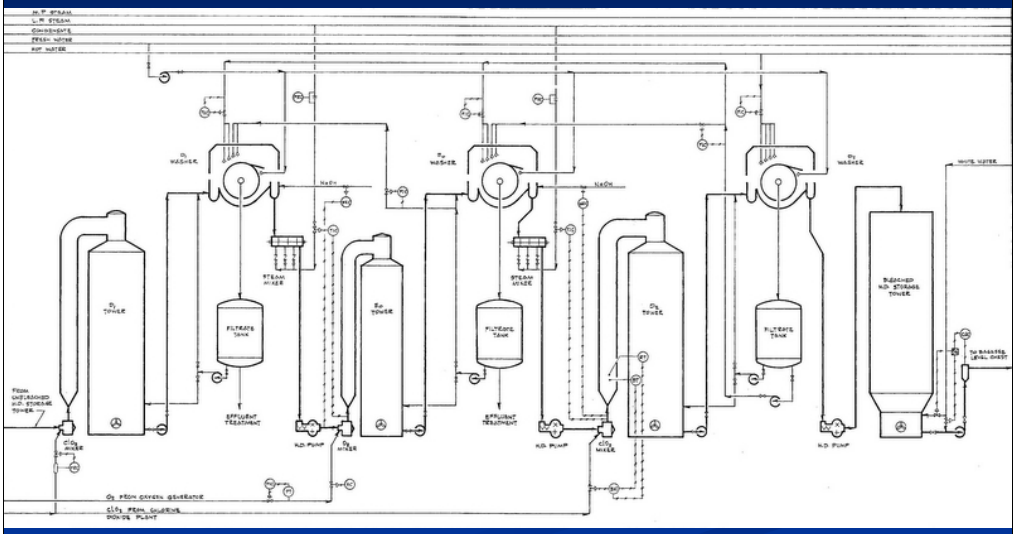

This flowsheet shows an ECF bleaching sequence: D-E-D – using chlorine dioxide in the first and last stages and caustic extraction in the middle. Depending on the incoming pulp Kappa number and the chemical charge applied, you should be able to achieve 90 %ISO brightness of better.

The pulp is washed between each stage using washers similar to those identified earlier.

After bleaching the pulp is stored in a tower at medium consistency.

What happens next depends on whether the pulp is to be made into market pulp or into paper.

For this presentation, I am assuming that it is made into paper.

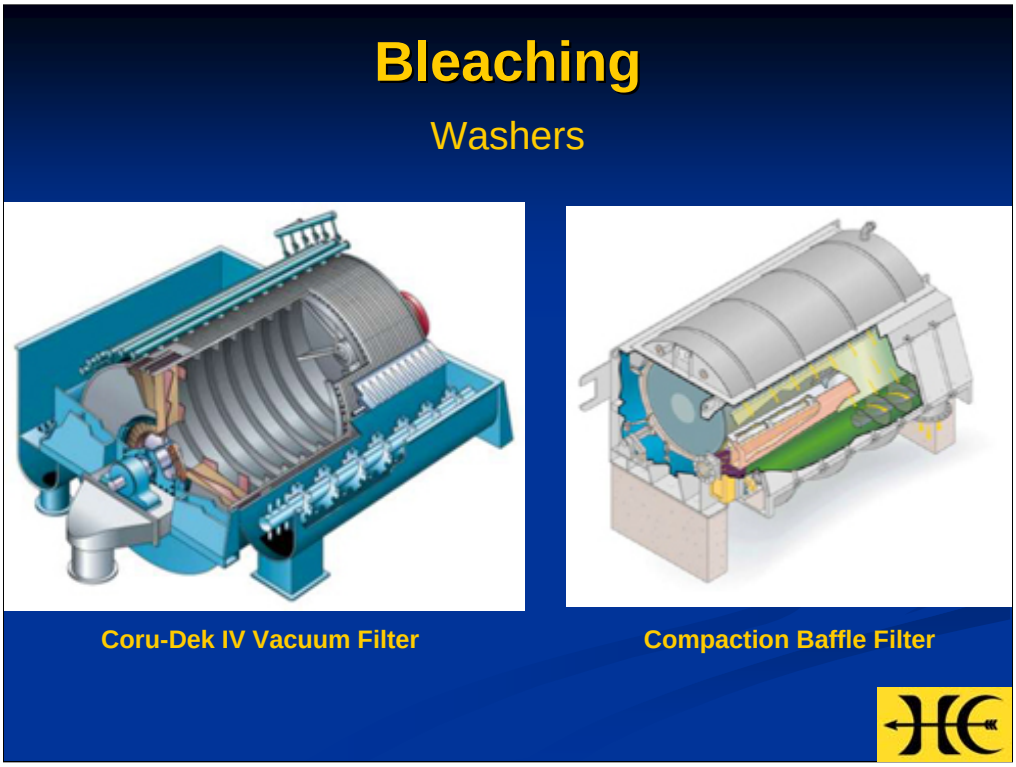

This slide shows two types of filters offered by GL&V of Canada – a Coru-Dek IV vacuum filter and a Compaction baffle pressure filter.

Bagasse Paper Mill Units

- Purchased pulp & stock preparation
- Paper Machine (PM) approach flow system & wet end
- Paper machine dry end

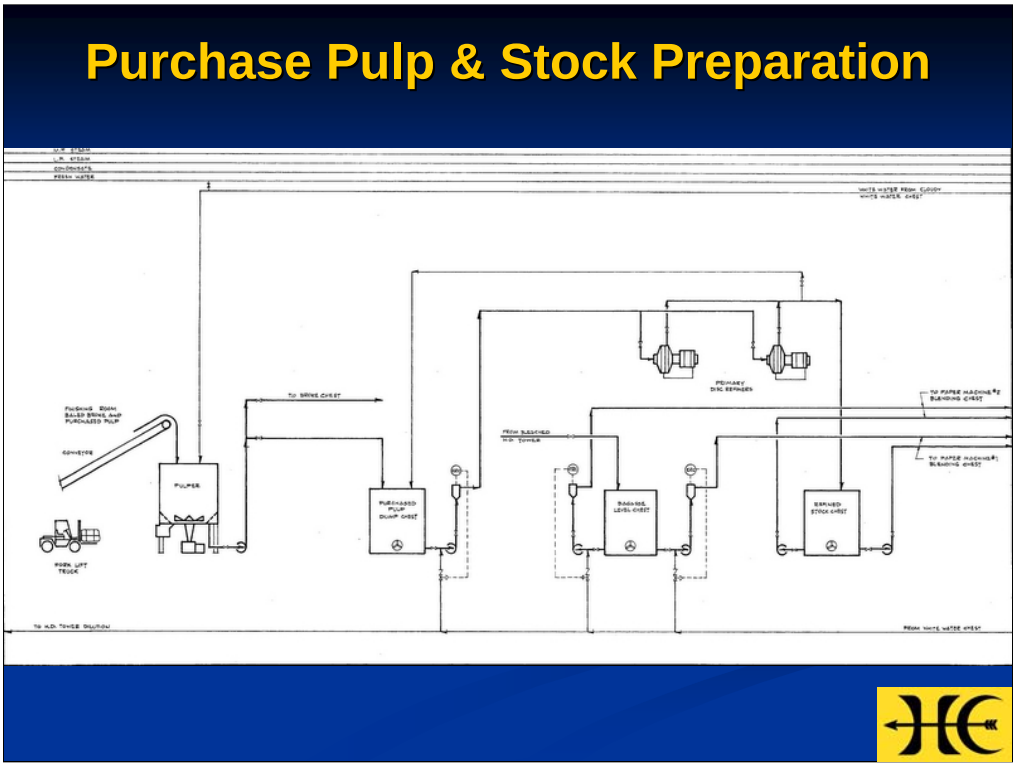

To make good quality paper using bagasse, you need ot add some long fibre softwood kraft pulp to provide strength to the paper.

The softwood pulp arrives in bales and is reslushed in a pulper into a pumpable slurry. It is pumped to a surge tank from which it is pumped to refiners to develop the strength properties of the pulp. Typically disc refiners are used.

Bagasse pulp from the pulp mill bleached high density storage tower typically does not require any refining.

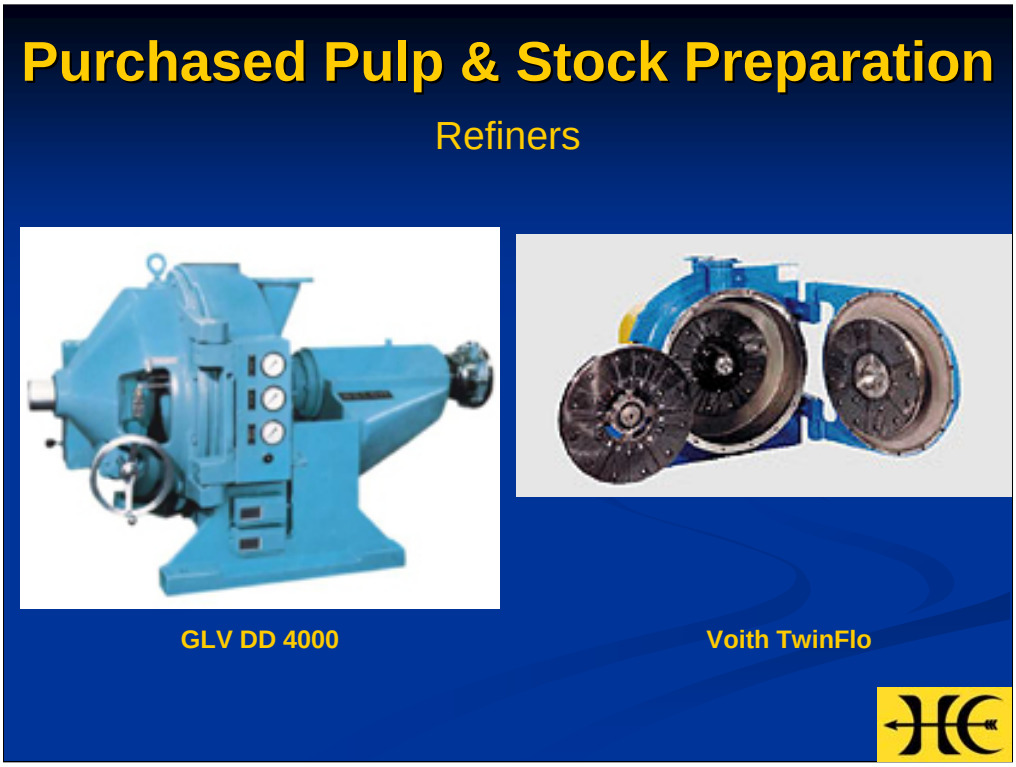

This slide shows a GLV DD 4000 refiner and a Voith TwinFlo double disk refiner with the rotor swung out.

Bagasse Paper Mill Units

- Purchased pulp & stock preparation
- Paper Machine (PM) approach flow system & wet end
- Paper machine dry end

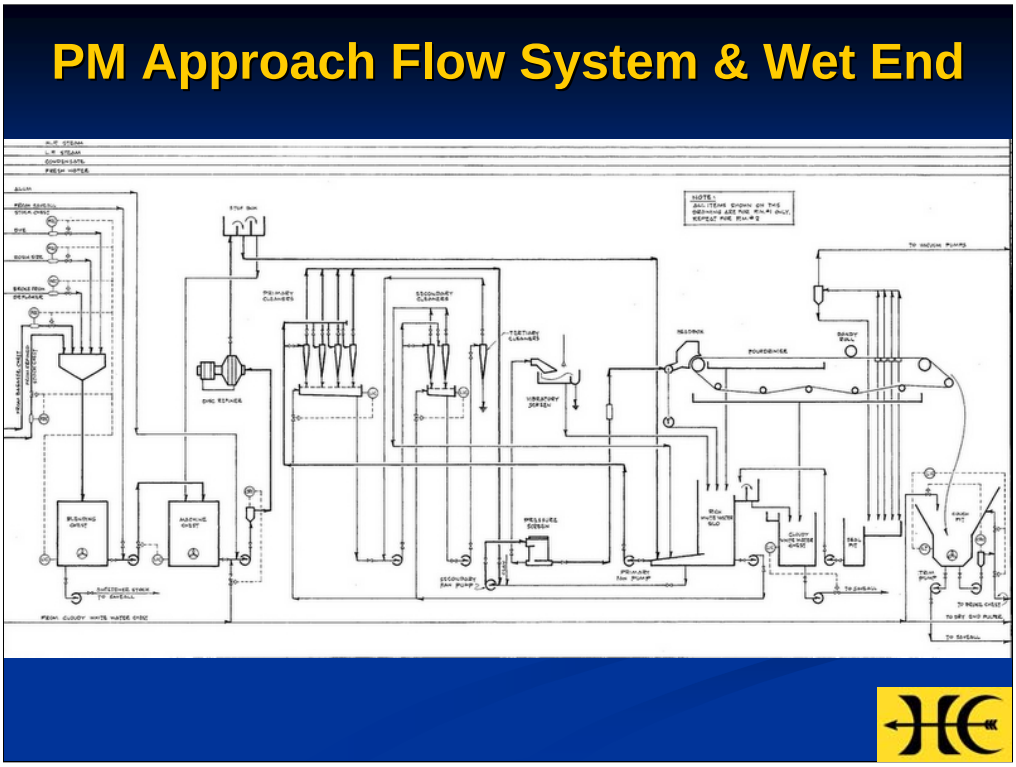

This flowsheet shows the paper machine approach flow system and the wet end of a fourdrinier paper machine.

It should be noted that this configuration is a little dated (about 12 years old) and that some changes to the wet end would be made for a modern mill. However, the overall concept still holds true.

The two pulps – softwood and bagasse along with several additives such as fillers, optical brighteners, retention aids are added in controled amounts to the blend chest where they are mixed together into a uniform slurry.

The blended stock is then pumped to the machine chest from which it is pumped through a final touch-up refiner to a stuff box for metering into the paper machine approach flow system.

The stock from the stuff box is fed to the suction of the fan pump from which it is fed to a final cleaning and screening system and then to the paper machine headbox.

The headbox distributes the slurry onto the paper machine wire and as water is removed the sheet of paper is formed.

This flowsheet shows the paper sheet entering the couch pit which would occur of there is a paper break but typically it is sent to the press section of the paper machine shown on the next flowsheet.

PM Approach Flow System & Wet End

Various Wet End Options

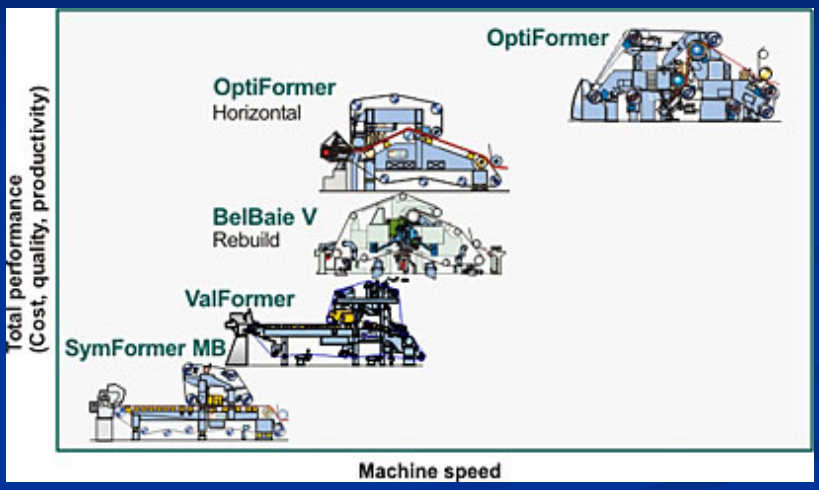

Metso Forming Concepts

PM Approach Flow System & Wet End

Various Wet End Options

GLV Top Flyte Former

Bagasse Paper Mill Units

- Purchased pulp & stock preparation
- Paper Machine (PM) approach flow system & wet end
- Paper machine dry end

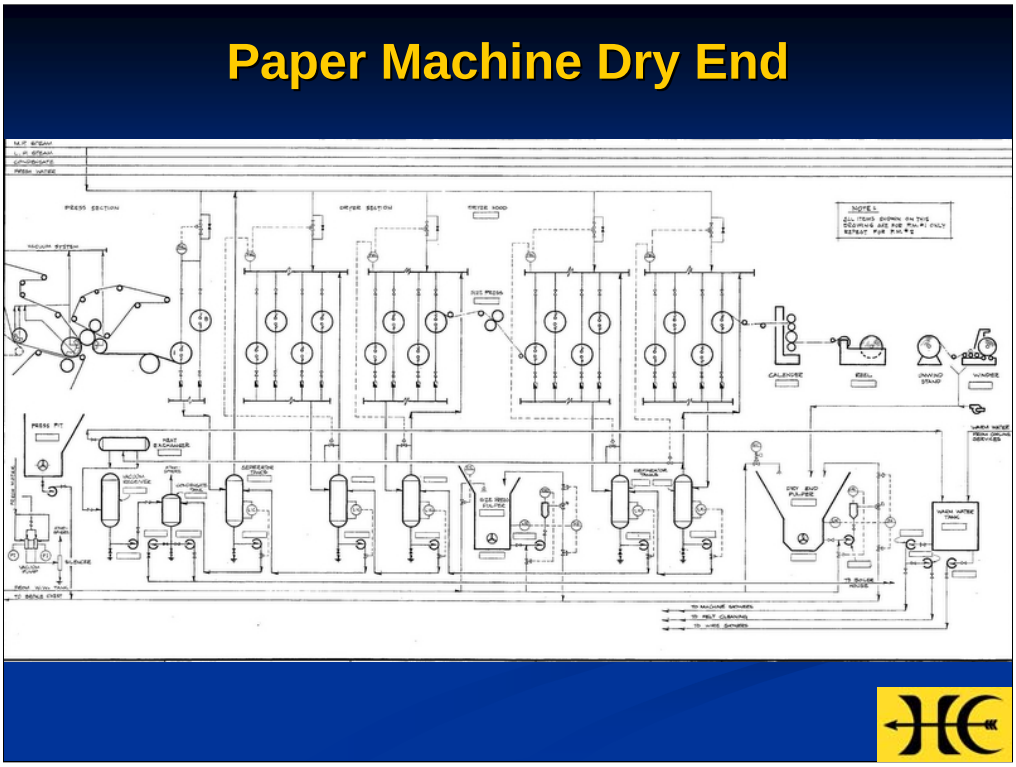

The paper sheet from the wet end former is fed through a multi-nip press section to press out water – typically achieving about 45 – 48% solids on a high bagasse content sheet. Over pressing must be avoided to keep from crushing the paper.

From the press section, the paper sheet enters several sections of cylinder dryers. For fine papers, a size press is included in the dry end to apply sizing to the paper (sizing prevents feathering when ink is applied to the paper) and it is followed by more dryer sections to finish the drying.

Once dried, the paper is run though a calendar stack and then onto the reel which builds up a large roll of paper the width of the paper machine. The reels of paper are taken off the paper machine and then run through a slitter winder to cut the paper into the proper roll widths..

Paper Machine Dry End

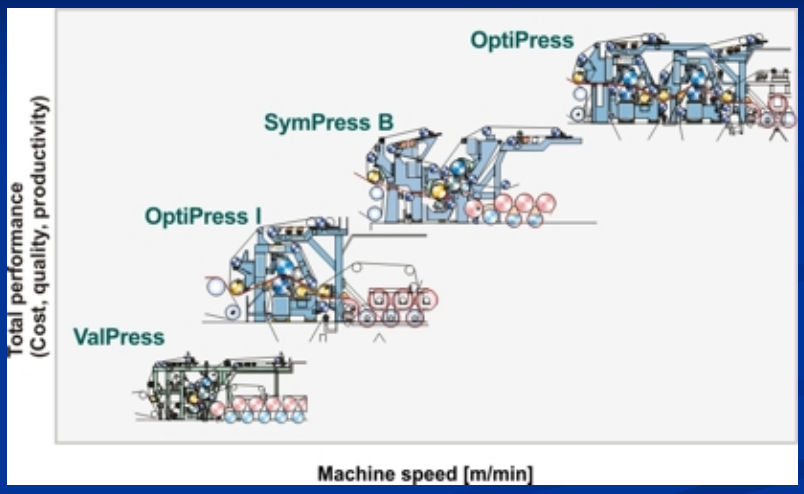

Metso Pressing Concepts – woodfree grades

Paper Machine Dry End

Press Section

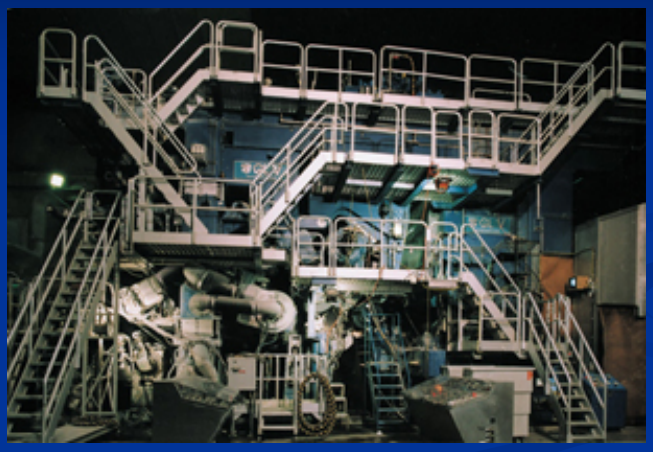

GLV Press Section

Paper Machine Dry End

Cylinder Dryers

Paper Machine Dry End

Size Press

Metso ValSizer Size Press

Paper Machine Dry End

Calendar

Metso ValSoft Soft Nip Calendar

Paper Machine Dry End

Reel

Metso ValReel